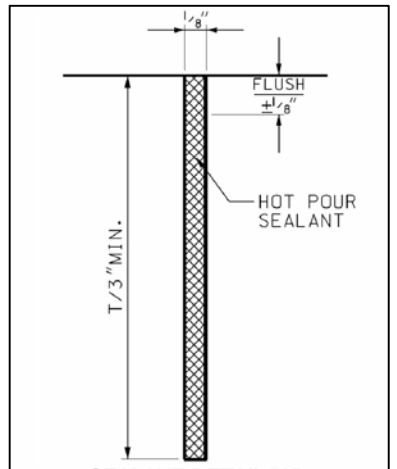

SEALANT DETAIL "A"

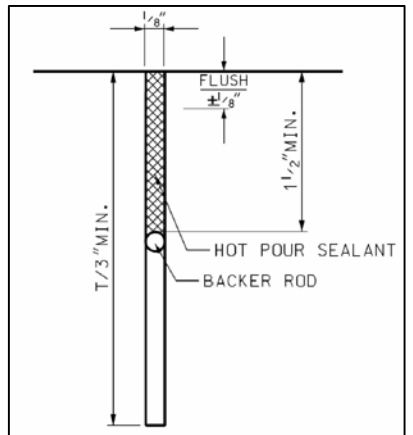

SEALANT DETAIL "B"

OPTIONAL INSTALLATION FOR SEALANT DETAIL "A"

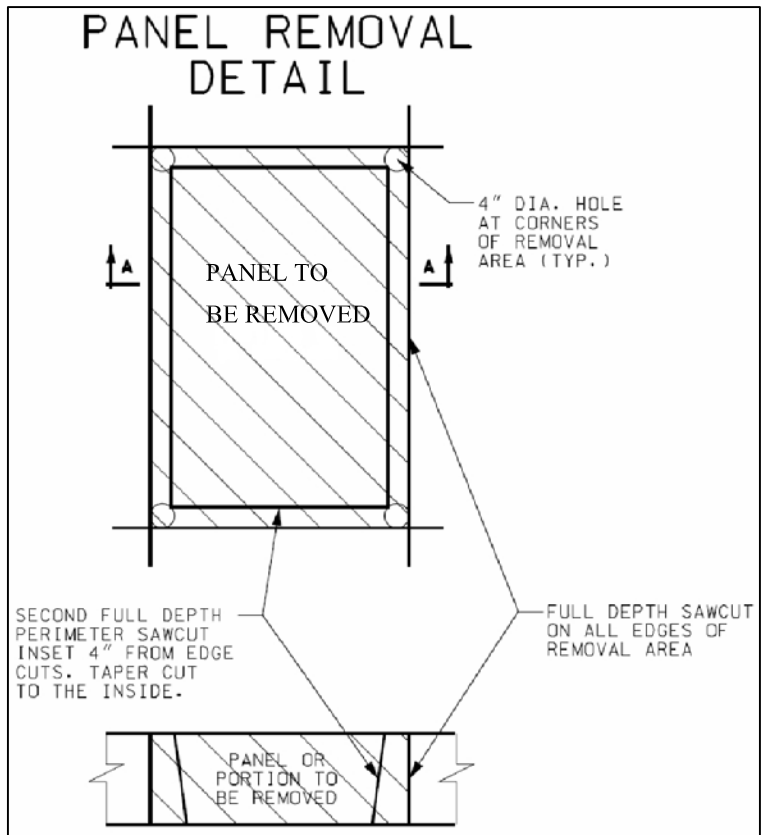

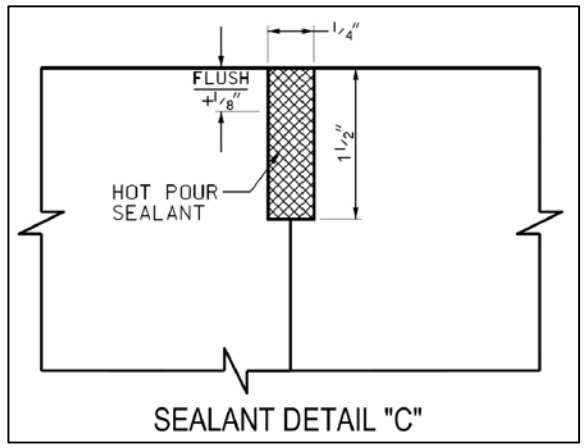

SEALANT DETAIL "C"

TABLE 1	
PAVEMENT THICKNESS	DOWEL BAR SIZE
6" - 7.5"	NO. 6
8" - 9.5"	NO. 8
10" - 11.5"	NO. 10
12" OR GREATER	N0. 12

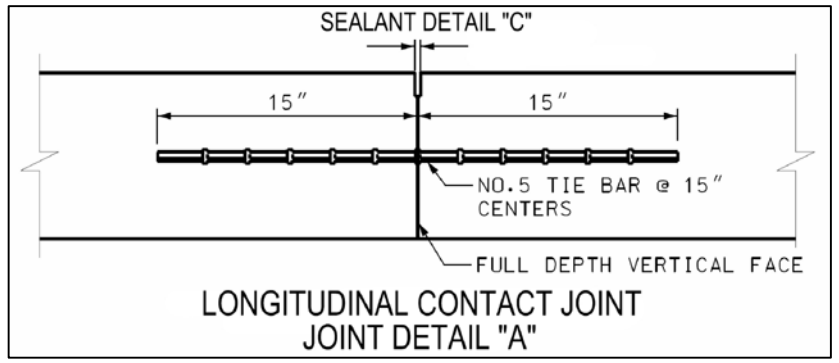

LONGITUDINAL CONTACT JOINT

JOINT DETAIL "A"

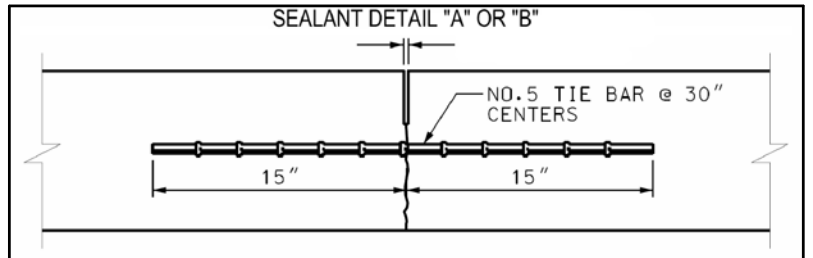

SAWED LONGITUDINAL JOINT

JOINT DETAIL "B"

(T/3 SAW CUT W/ AGGREGATE INTERLOCK BELOW)

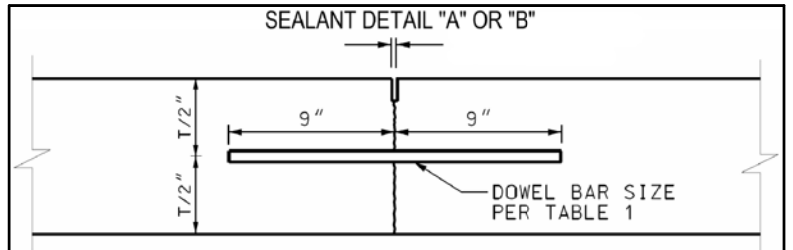

LOAD TRANSFER DOWEL BAR JOINT

JOINT DETAIL "C"

INSTALL DOWEL BARS PARALLEL TO THE CENTERLINE
AND TO THE PAVEMENT SURFACE.
LIMIT DEVIATIONS FROM PARALLEL TO ± 1/4"
IN THE LENGTH OF THE DOWEL BAR.

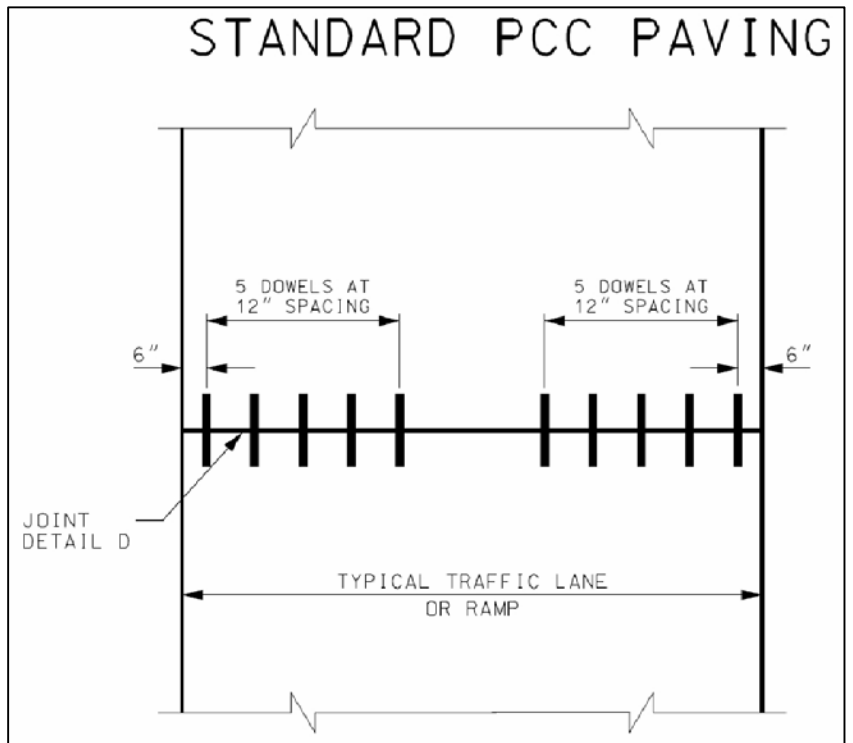

LOAD TRANSFER DOWEL BAR LAYOUT

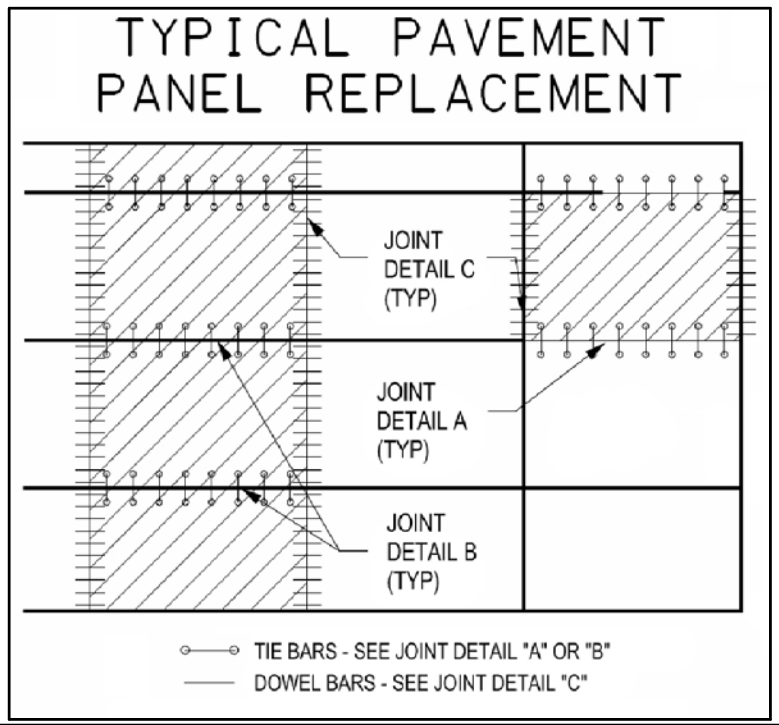

NOTES:

1) CONFORM TO UDOT STANDARD SPECIFICATION SECTION 02753.

2) ALL TIE BARS ARE DEFORMED REBAR.

3) ALL DOWEL BARS ARE SMOOTH.

4) MAKE FULL DEPTH SAWCUT AROUND ALL EDGES OF PANELS OR PORTIONS REPLACED. MINIMIZE OVERCUT INTO ADJACENT PANELS.

Sandy PUBLIC WORKS

NO.	AUTHORIZED BY	REVISIONS	DATE

STANDARD PLAN

CP-01

CONCRETE PAVEMENT
PANEL REPLACEMENT