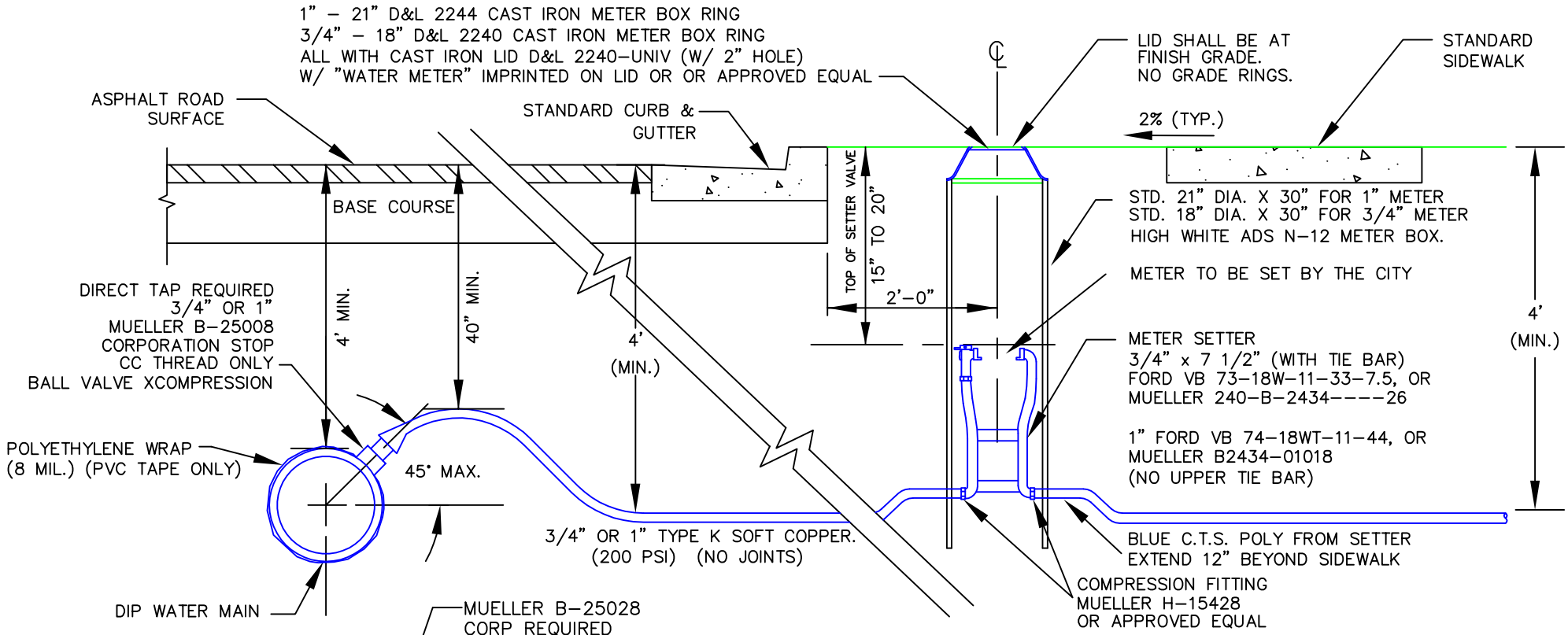

NOTES:

1. 10'–0" EDGE TO EDGE HORIZONTAL CLEARANCE IS REQUIRED BETWEEN WATER AND SEWER LATERAL SERVICE.
2. WHERE WATER AND SEWER LATERALS MUST CROSS, WATER LATERAL SHALL BE 18" ABOVE THE SEWER LATERAL AS MEASURED FROM THE BOTTOM OF THE WATER LATERAL TO THE TOP OF THE SEWER LATERAL. THIS SEPARATION SHALL BE MAINTAINED FOR AT LEAST 10'–0" EITHER SIDE OF CROSS POINT.
3. ALL COMPRESSION FITTINGS MUST BE A MUELLER H–15428 OR APPROVED EQUIVALENT.
4. TAPS IN DIP MUST BE 24" FROM ANY TAPS, BELL, OR MJ.
5. TAPS IN PVC MUST BE 36" FROM ANY TAPS, BELL, OR MJ.
6. PIPE BEDDING SHALL COMPLY WITH SANDY CITY STANDARDS SPECIFICATIONS
7. WHEN EXISTING CONNECTION IS ABANDONED AT MAIN, INSTALL BRASS CAP MUELLER H–15540

NO.	AUTHORIZED BY	REVISIONS	DATE
1	RSS	UPDATE	12/1999
2	DKW	UPDATE	5/2006
3	CC	UPDATE	1/2010
4	CC	UPDATE	4/2011
5	CC	UPDATE	5/2013
6	CC	UPDATE	2/2016

Sandy PUBLIC UTILITIES

STANDARD DETAIL

FIGURE 01

3/4" AND 1" WATER SERVICE

SCALE: NONE