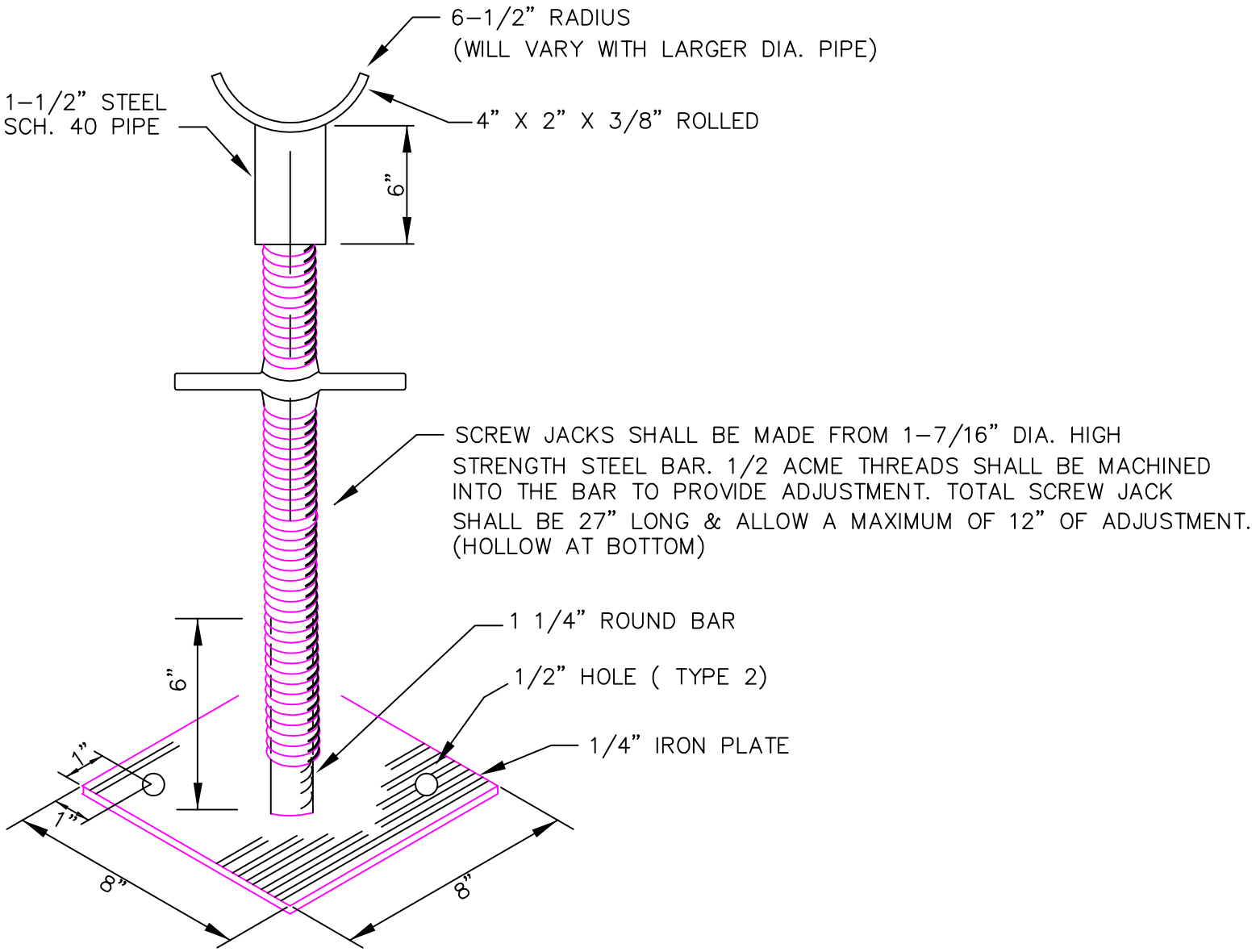

NO.	AUTHORIZED BY	REVISIONS	DATE
1	RSS	UPDATE	12/1999
2	CC	UPDATE	1/2010
3	CC	UPDATE	4/2013

Sandy PUBLIC UTILITIES

STANDARD DETAIL

FIGURE 11

JACK STAND PIPE SUPPORT

SCALE: NONE