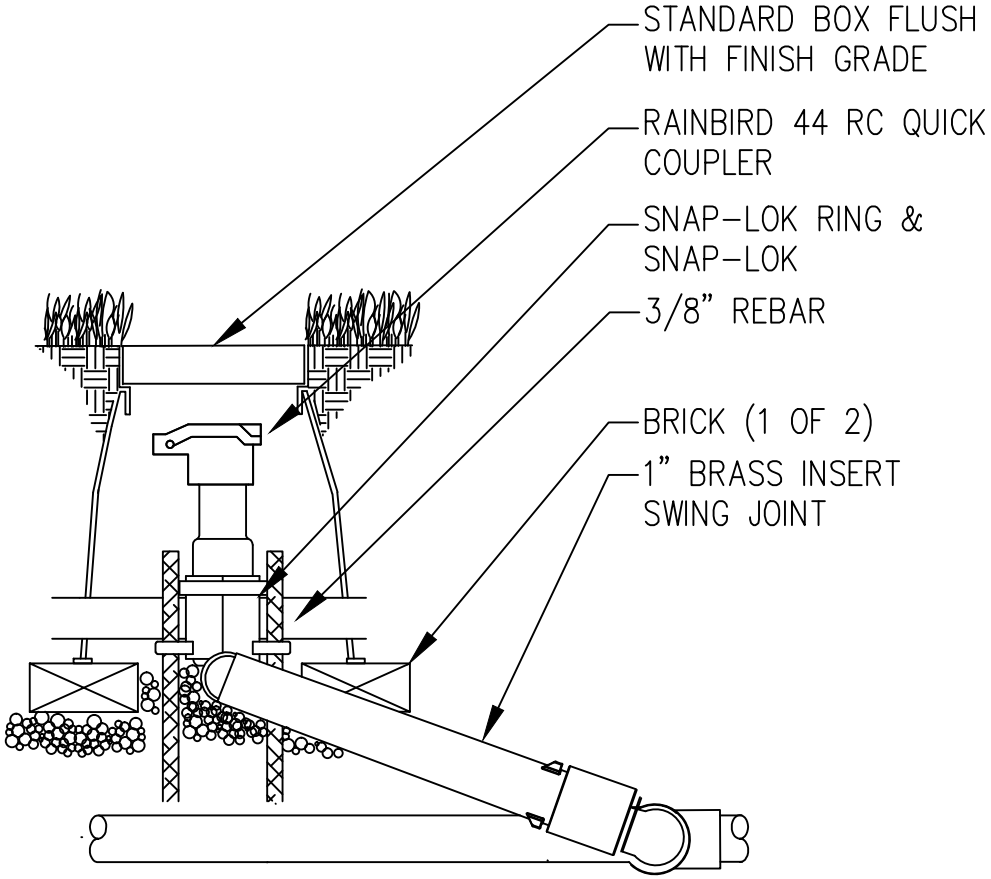

QUICK COUPLER VALVE

LA-13
SCALE: NOT TO SCALE

NO.	AUTHORIZED BY	REVISIONS	DATE

Sandy PARKS & RECREATION

STANDARD PLAN

LA-13