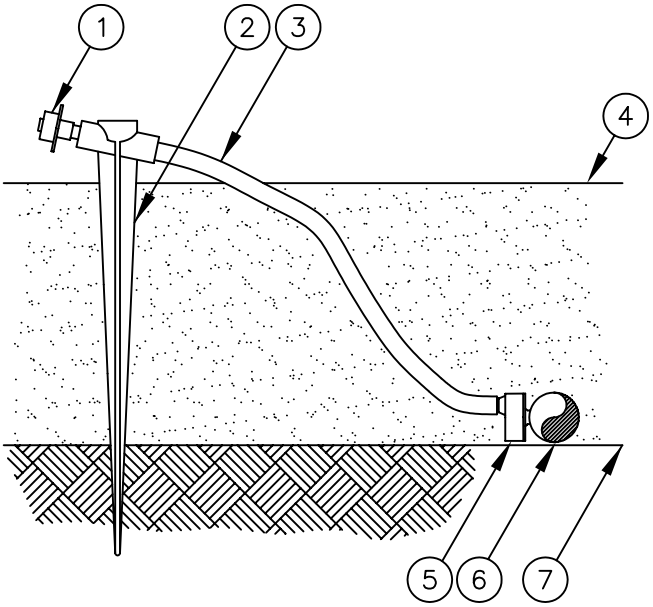

1. DIFFUSER BUG CAP:
   RAIN BIRD DBC–025
2. 1/4–INCH TUBING STAKE:
   RAIN BIRD TS–025
3. 1/4–INCH VINYL DISTRIBUTION TUBING
4. TOP OF MULCH
5. SINGLE–OUTLET EMITTER:
   RAIN BIRD
   XERI–BUG EMITTERS XB–20
6. THIN WALL POLY DRIP PIPE:
   SIZED AS PER PLAN
7. FINISH GRADE

EMITTER INTO POLY–TUBE

NO.	AUTHORIZED BY	REVISIONS	DATE

SANDY CITY 1893 STATE OF UTAH

STANDARD PLAN

LA–41