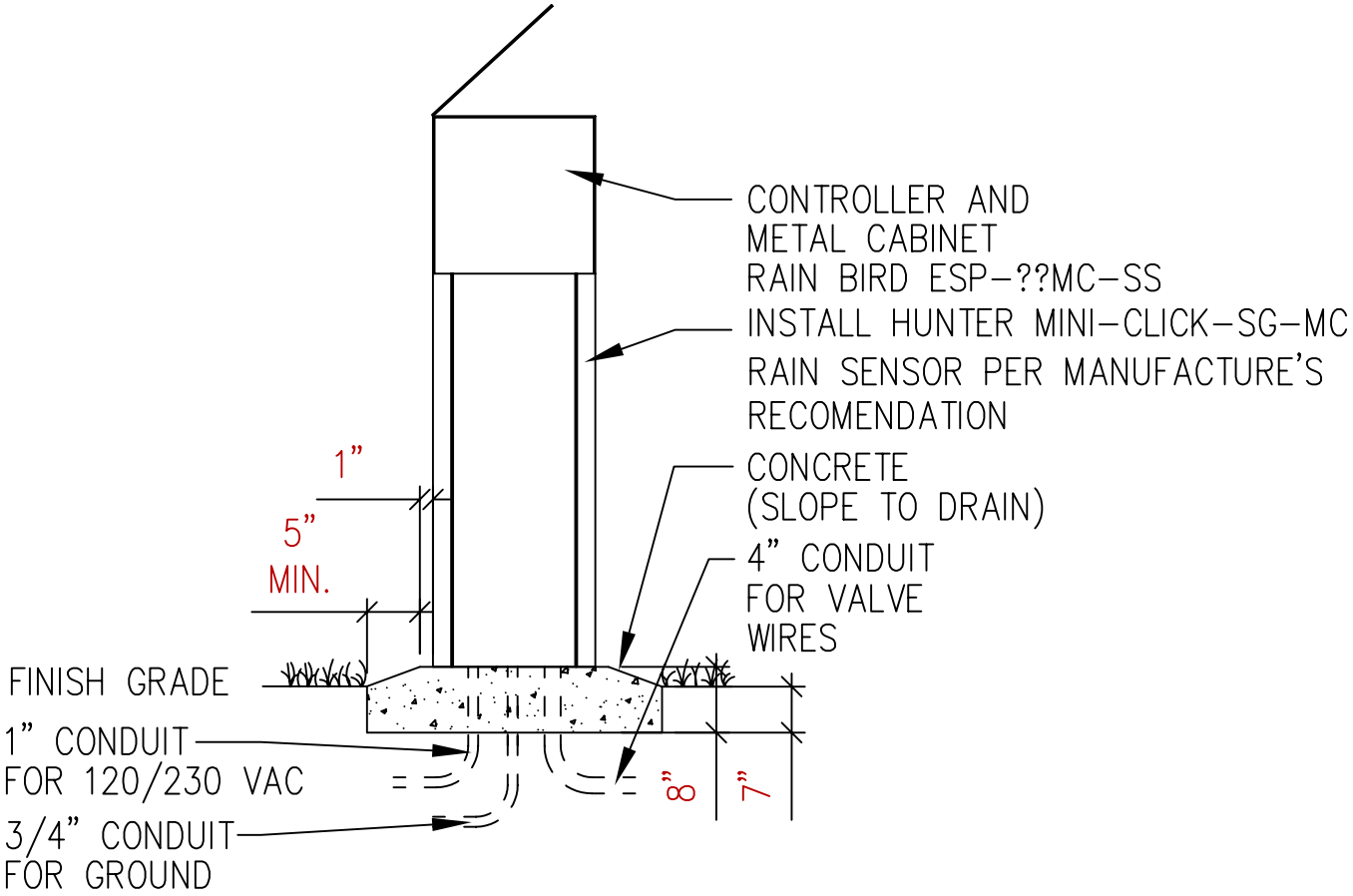

PEDESTAL W/CONTROLLER

NO SCALE

NO.	AUTHORIZED BY	REVISIONS	DATE

SANDY CITY 1893 STATE OF UTAH

STANDARD PLAN

LA-50