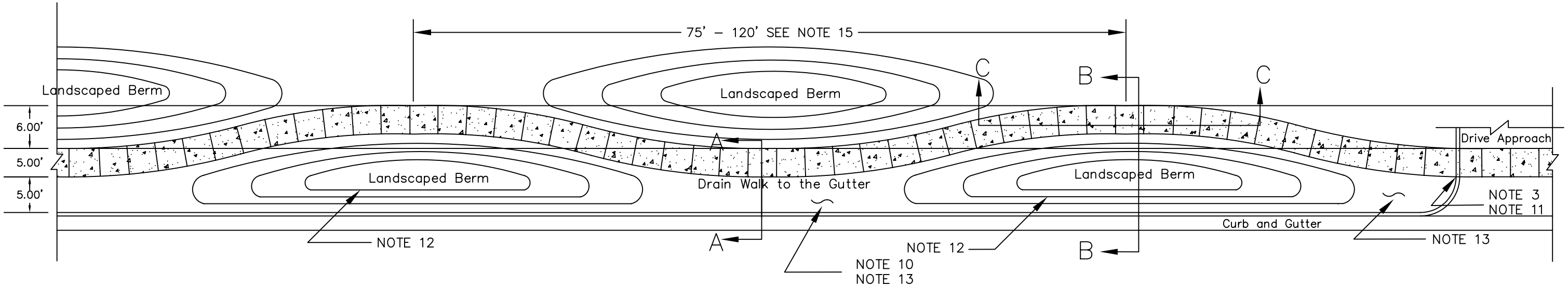

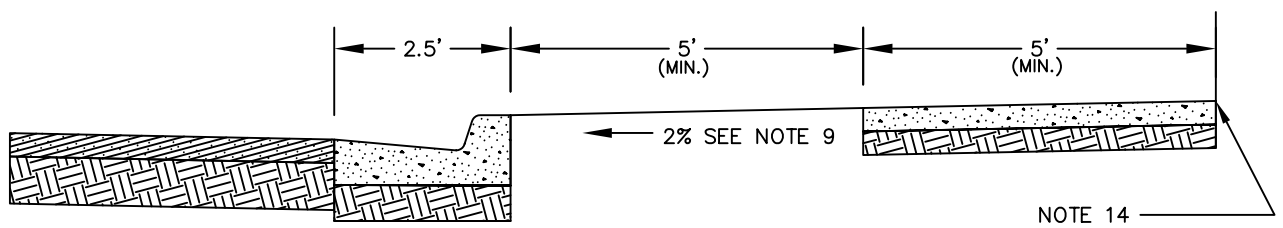

SECTION A–A

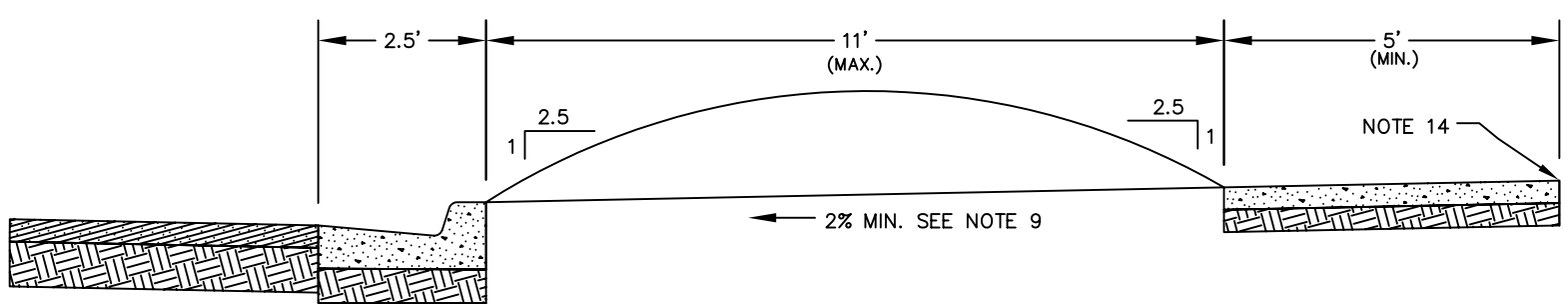

SECTION B–B

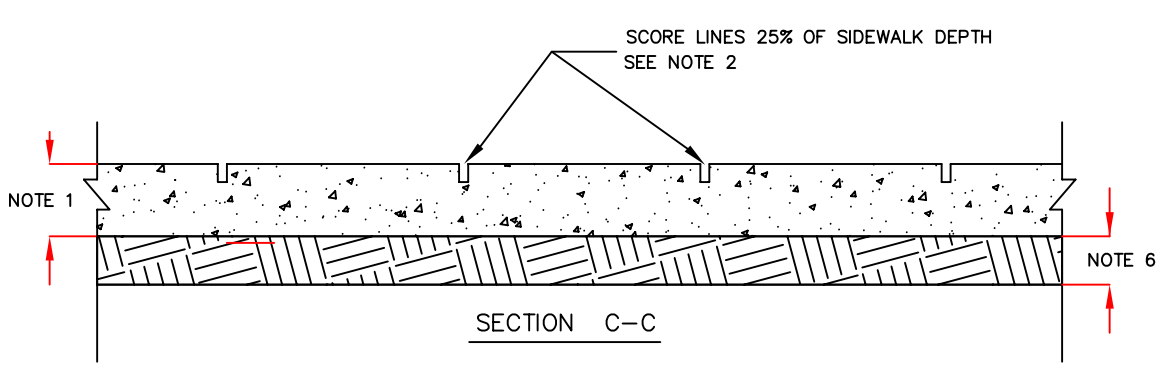

SECTION C–C

GENERAL NOTES

1. USE MONOLITHIC CONSTRUCTION 4" THICK, EXCEPT AT DRIVEWAYS WHERE A THICKNESS OF 7" IN COMMERCIAL OR INDUSTRIAL ZONE AREAS AND 6" IN RESIDENTIAL ZONE AREAS IS REQUIRED.
2. PLACE SCORE LINES TO A DEPTH OF 25% OF THE SIDEWALK THICKNESS AT INTERVALS EQUAL TO THE WIDTH OF THE SIDEWALK; PLACED UNIFORMLY ALONG THE LENGTH OF SIDEWALK.
3. USE 1/2" EXPANSION JOINT FILLER MADE OF PREMOLDED BITUMINOUS OR SIMILAR MATERIAL AT INTERSECTIONS WITH PERPENDICULAR SIDEWALKS OR DRIVEWAYS.
4. EDGE SIDEWALK AND EXPANSION JOINTS WITH 1/2" RADIUS EDGING TOOL.
5. WALKS SHALL BE FINISHED AS PER SECTION 03050.
6. USE A MINIMUM OF 4" UNTREATED BASE COURSE; COMPACT TO 96% OF THE MAXIMUM DRY DENSITY. (ASTM D698)
7. UNLESS SPECIFIED OTHERWISE, CONSTRUCT WIDTH OF SIDEWALK AS FOLLOWS:
   A) 4 FEET.
   B) MATCH TO EXISTING SIDEWALK EXTENSION WIDTHS.
8. THE CLASS OF CONCRETE FOR SIDEWALKS SHALL BE AA(AE), SEE SECTION 03000.
9. MAINTAIN SIDEWALK ELEVATION AT +2% FROM THE TOP BACK OF CURB.
10. CONTRACTOR/DEVELOPER IS RESPONSIBLE TO ENSURE POSITIVE DRAINAGE ON THE SIDEWALK, ELIMINATING PONDING WATER. SEE SECTION 03050.
11. WALK SHALL RETURN TO THE STANDARD LOCATION FOR TYPICAL INTERSECTION WITH ALL DRIVE APPROACHES, HANDICAP RAMPS, AND EXISTING IMPROVEMENTS AS REQUIRED. COMPLY WITH THE REQUIREMENTS OF STANDARD DRAWINGS: CD–01, CD–03, IC–01, ETC.
12. LANDSCAPE BERMING IS REQUIRED BETWEEN THE CURB AND THE WALK AT ALL LOCATIONS EXCEPT WHERE UTILITIES WILL BE LOCATED. BERM SLOPE SHALL NOT EXCEDE 2.5:1 (H:V).
13. LOCATE UTILITIES IN AREAS WHERE THE MEANDER IS NEAREST THE CURB. MAINTAIN A –2% GRADE TOWARD THE CURB FOR A MINIMUM 3 FOOT RADIUS AROUND ALL UTILITIES.
14. THE DISTANCE FROM THE TOP BACK OF CURB TO THE TOP BACK OF WALK SHALL BE MAINTAINED BETWEEN 9 FEET MINIMUM AND 15 FEET MAXIMUM.
15. THE DISTANCE BETWEEN FULL CYCLE MEANDERS SHALL BE WITHIN THE RANGE OF 75 FEET TO 120 FEET.
16. A MEANDERING SIDEWALK EASEMENT IS REQUIRED TO BE DEFINED AND RECORDED.
17. SEE DIVISION 7 FOR LANDSCAPING AND IRRIGATION SPECIFICATIONS.
18. NO TREES SHALL BE PLANTED CLOSER THAN 4 FEET FROM THE BACK OF CURB OR EDGE OF SIDEWALK (EITHER SIDE OF WALK) AS MEASURED FROM THE CENTERLINE OF THE TREE.

NO.	AUTHORIZED BY	DRAWN BY	DATE
1	J. OLSEN	D. ULVESTAD	2/1/00
2	M. GLADBACH	NOTE 17	3/24/04
3	M. GLADBACH	5' SIDEWALK & NOTE 18	5/8/06

SANDY CITY CORPORATION

STANDARD DETAIL

MS–01

MEANDERING SIDEWALK