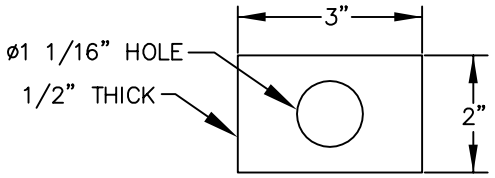

PLATE WASHER DETAIL

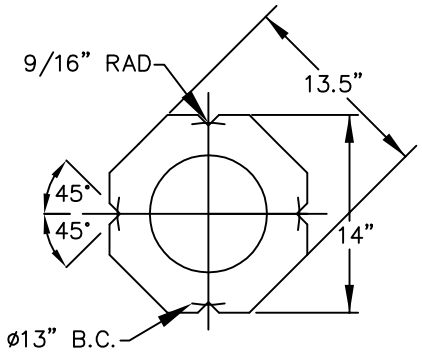

POLE BASE PLATE DETAILS
(1" THICK)

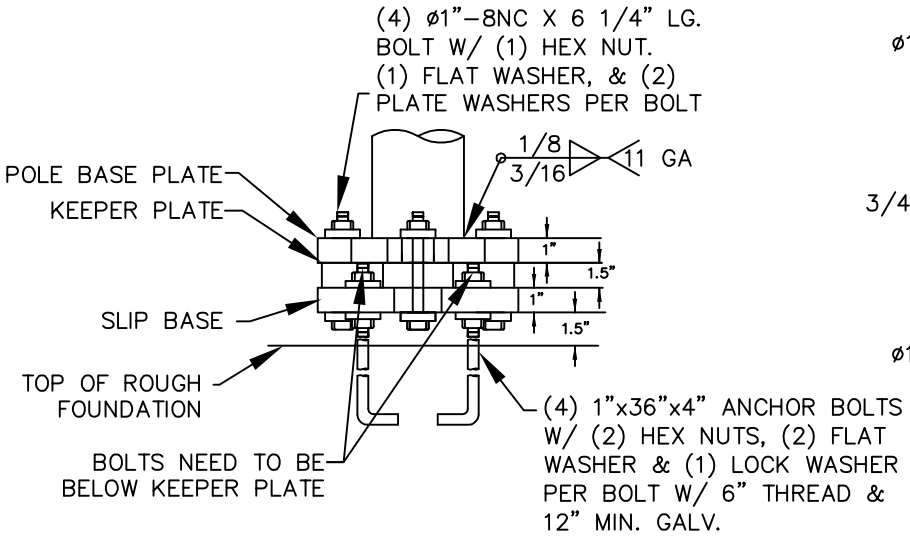

SLIP BASE CONNECTION DETAIL

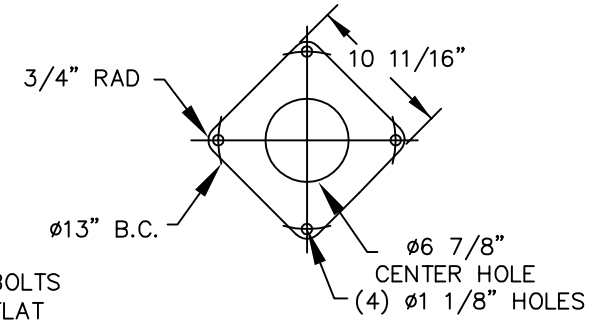

28 GA (0.015") KEEPER PLATE DETAIL

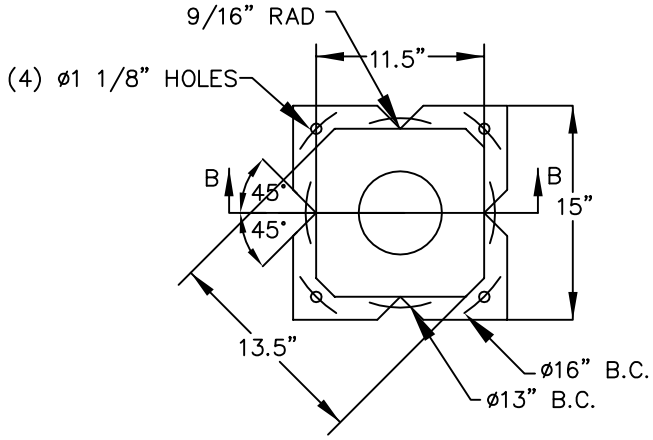

SLIP BASE DETAIL

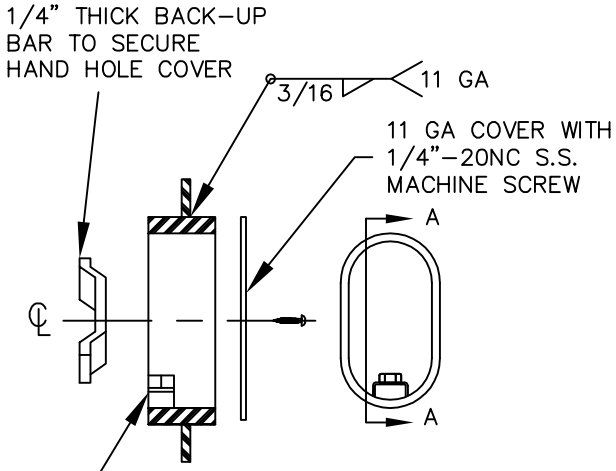

SECTION A-A **FRONT VIEW**

4" x 6 1/2" HAND HOLE FRAME DETAIL

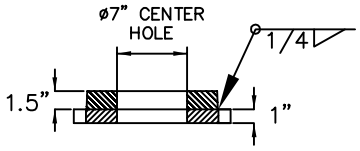

SECTION B-B

GROUND LUG PROVISION
INSIDE HAND HOLE

NOTE: SLIP BASE SHALL
BE COATED BLACK.

NO.	AUTHORIZED BY	REVISIONS	DATE
1	CC	CREATE	04/2010
2	CC	UPDATE	11/2011
3	CC	UPDATE	02/2015

Sandy
PUBLIC UTILITIES

STANDARD DETAIL

SL–07

ARTERIAL STREET LIGHT
BASE CONNECTION DETAIL
NOT TO SCALE