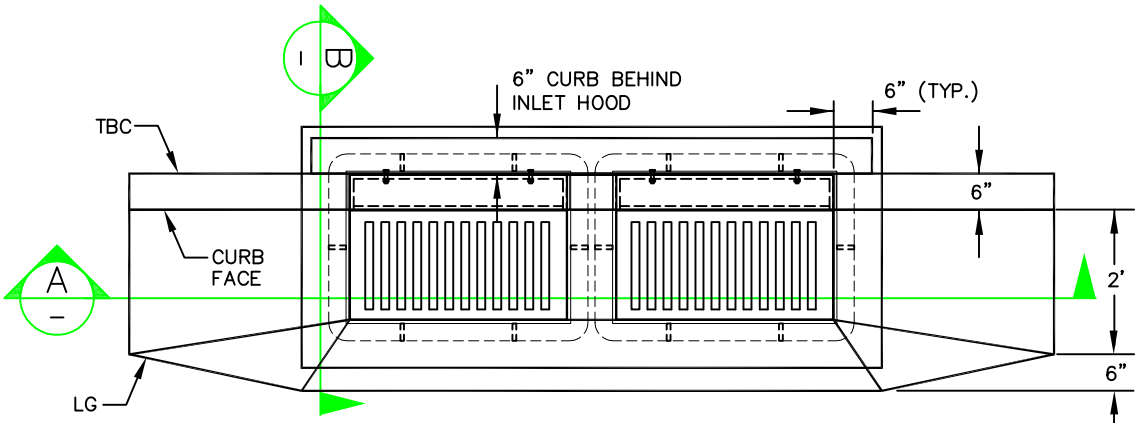

DOUBLE CURB INLET BOX

* SEE SHEET SW-01 FOR SPECIFICATIONS AND ADDITIONAL NOTES/DETAILS INCLUDING WALL REINFORCEMENT.

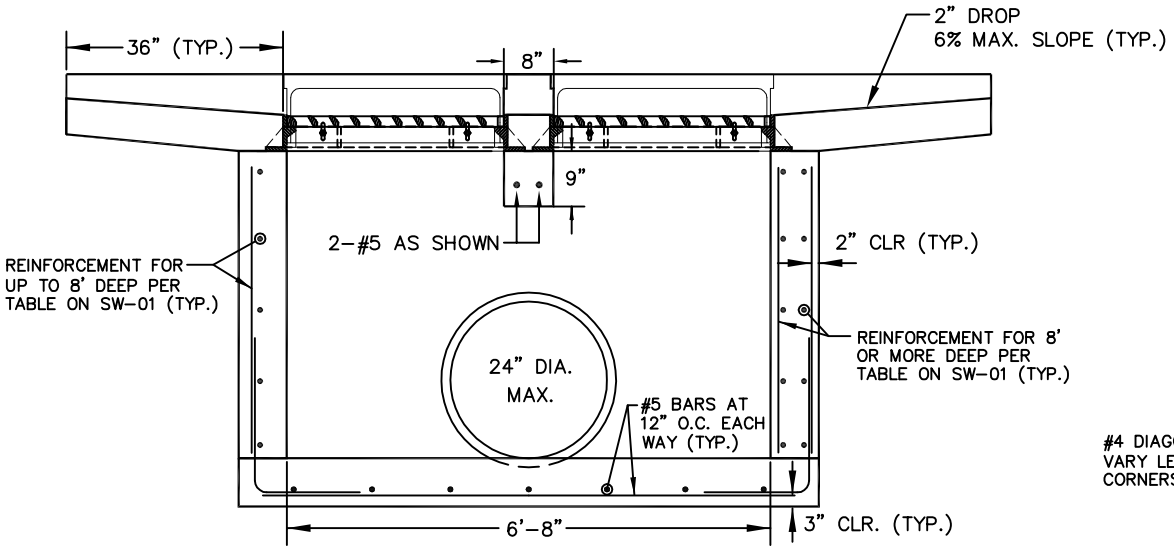

SECTION A

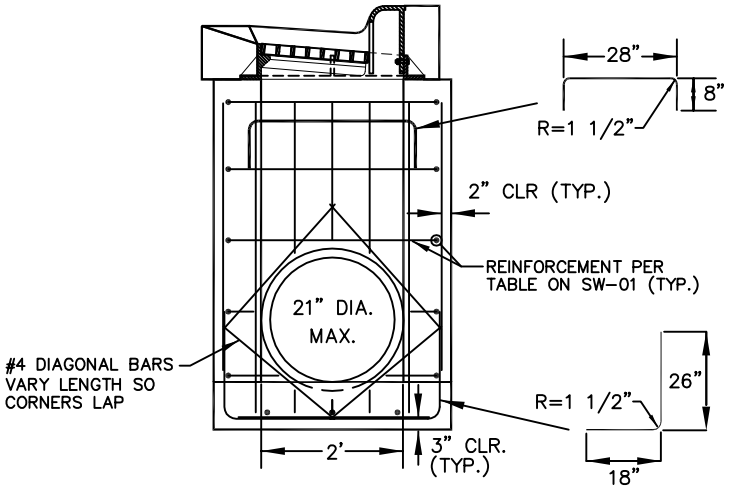

SECTION B

NO.	AUTHORIZED BY	REVISIONS	DATE
1	TS	CREATED	2/2015

Sandy PUBLIC UTILITIES

STANDARD DETAIL

SW-03

DOUBLE CURB INLET BOX

SCALE: NONE