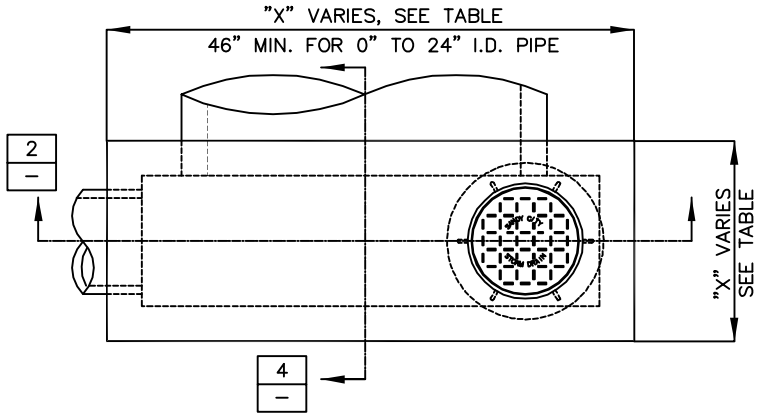

1 PLAN @ STANDARD CLEANOUT

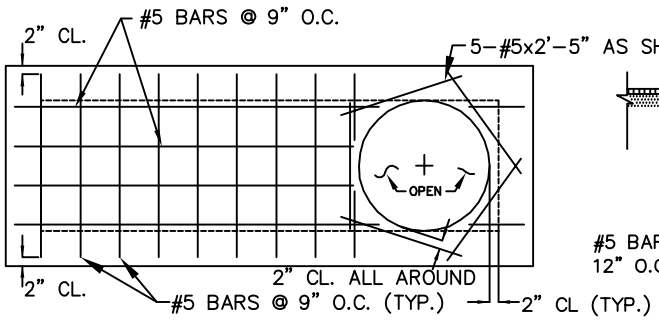

3 STEEL PLACEMENT IN TOP SLAB

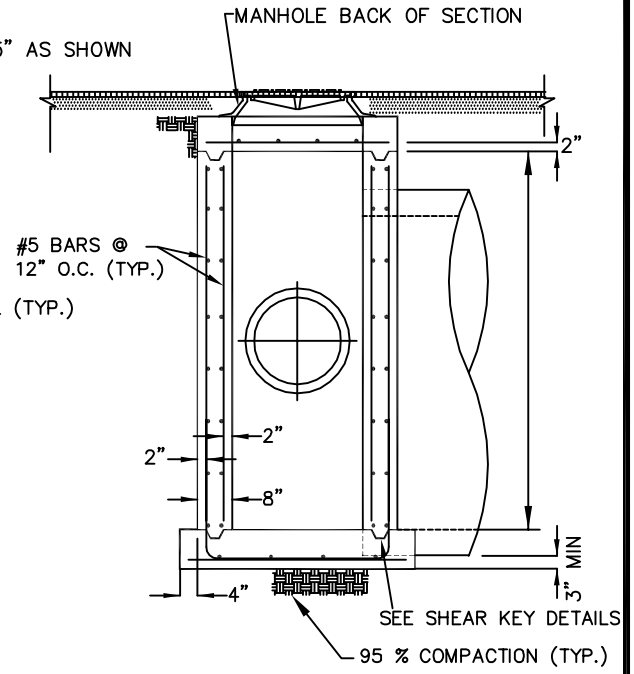

4 SECTION THRU STORM DRAIN CLEANOUT

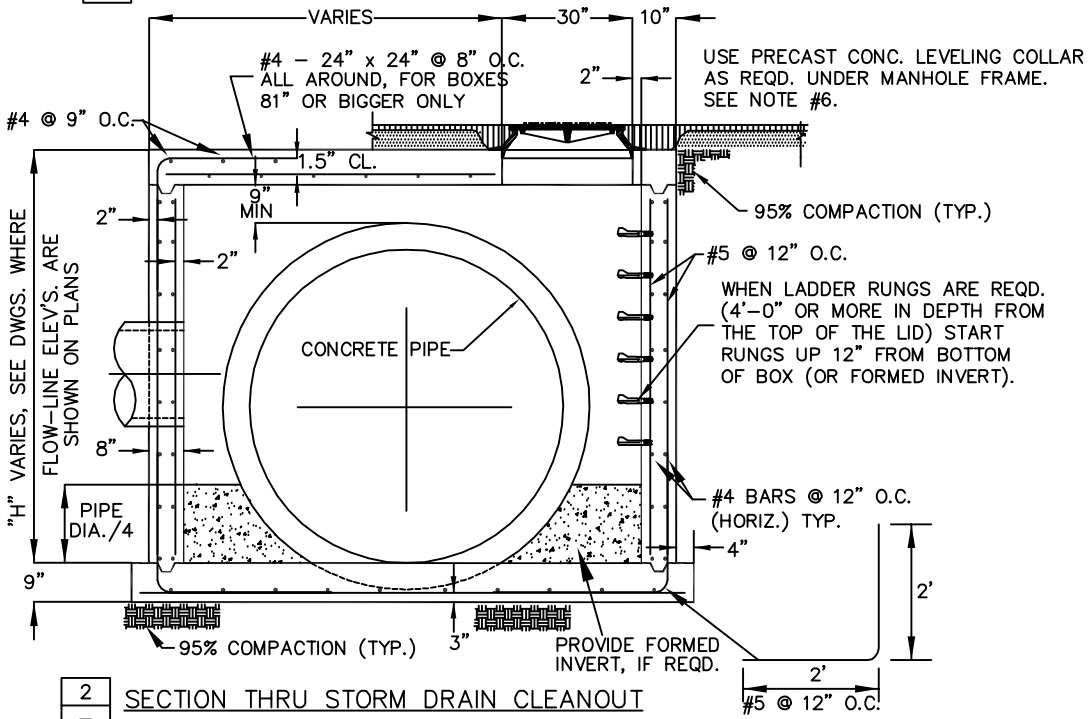

2 SECTION THRU STORM DRAIN CLEANOUT

PIPE SIZE	DIMENSION "X"
18"	3'- 10"
21"	3'- 10"
24"	3'- 10"
27"	4'- 2"
30"	4'- 6"
33"	4'- 9"
36"	5'- 0"
42"	5'- 7"
48"	6'- 3"
54"	6'- 9"

FOR LARGER PIPE SIZE, CHECK WITH ENGINEER.

NO.	AUTHORIZED BY	REVISIONS	DATE
1	CC	UPDATE	1/2010

Sandy PUBLIC UTILITIES

STANDARD DETAIL

SW-07A

STORM DRAIN CLEANOUT
PLAN, SECTION, AND DETAILS

SCALE: NONE