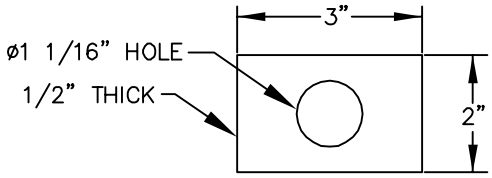

PLATE WASHER DETAIL
(REF: C55092G)

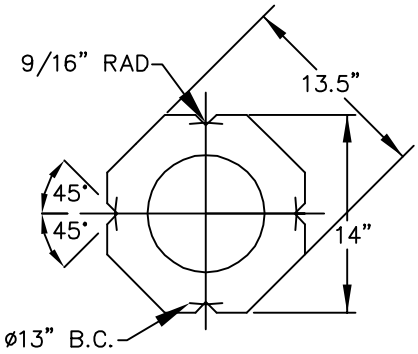

POLE BASE PLATE DETAILS
(1" THICK)

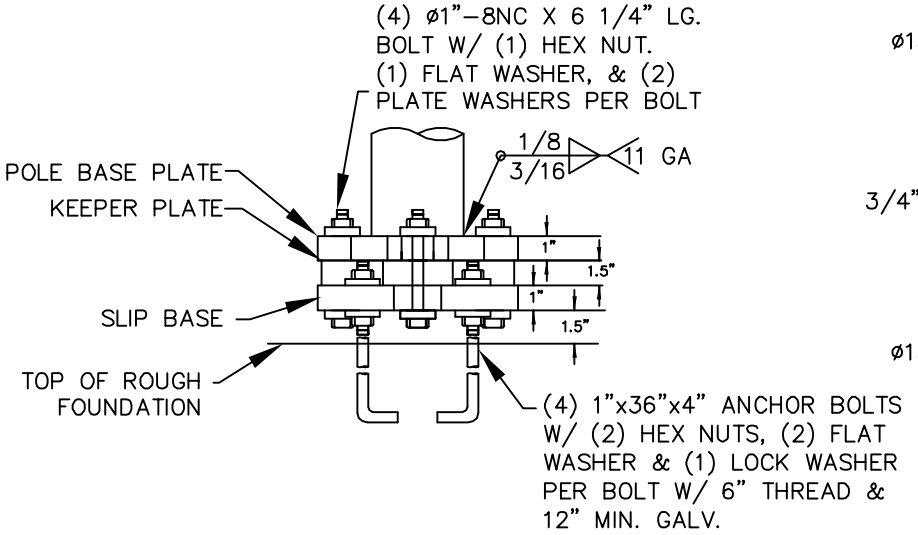

SLIP BASE CONNECTION DETAIL

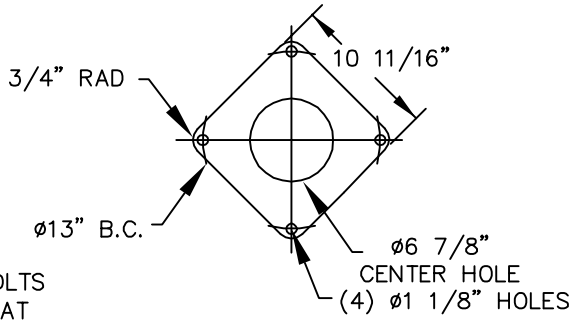

28 GA (0.015") KEEPER PLATE DETAIL

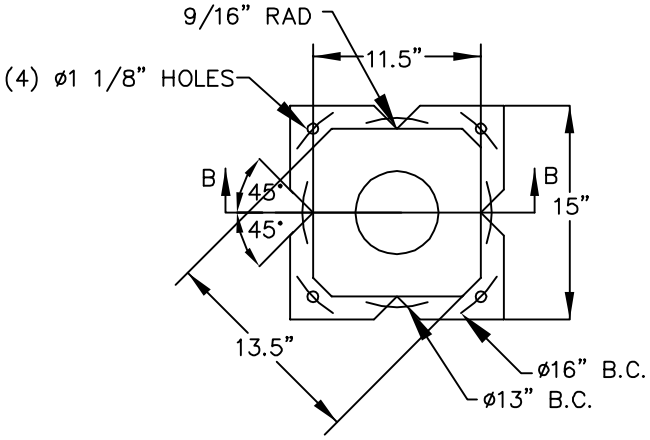

SLIP BASE DETAIL

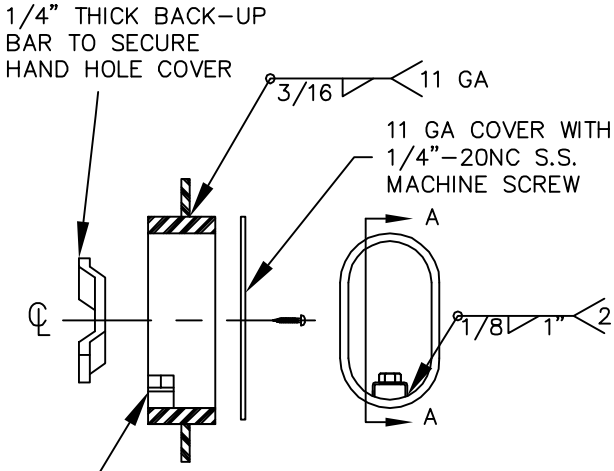

SECTION A-A **FRONT VIEW**

4" x 6 1/2" HAND HOLE FRAME DETAIL

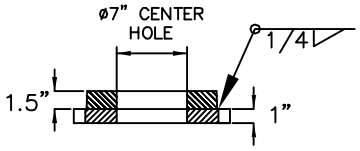

SECTION B-B

GROUNDING PROVISION NUT
RETAINER C24774 WELDED
TO HAND HOLE FRAME W/
1/2" –13NC S.S. SQ NUT &
3/4" LG. S.S. HEX BOLT

STANDARD ARTERIAL STREET LIGHT BASE CONNECTION DETAIL

NO SCALE

NO.	AUTHORIZED BY	REVISIONS	DATE
1	CC	UPDATE	04/2010

Sandy PUBLIC UTILITIES

STANDARD DETAIL

SL–5

ARTERIAL STREET LIGHT
BASE CONNECTION DETAIL