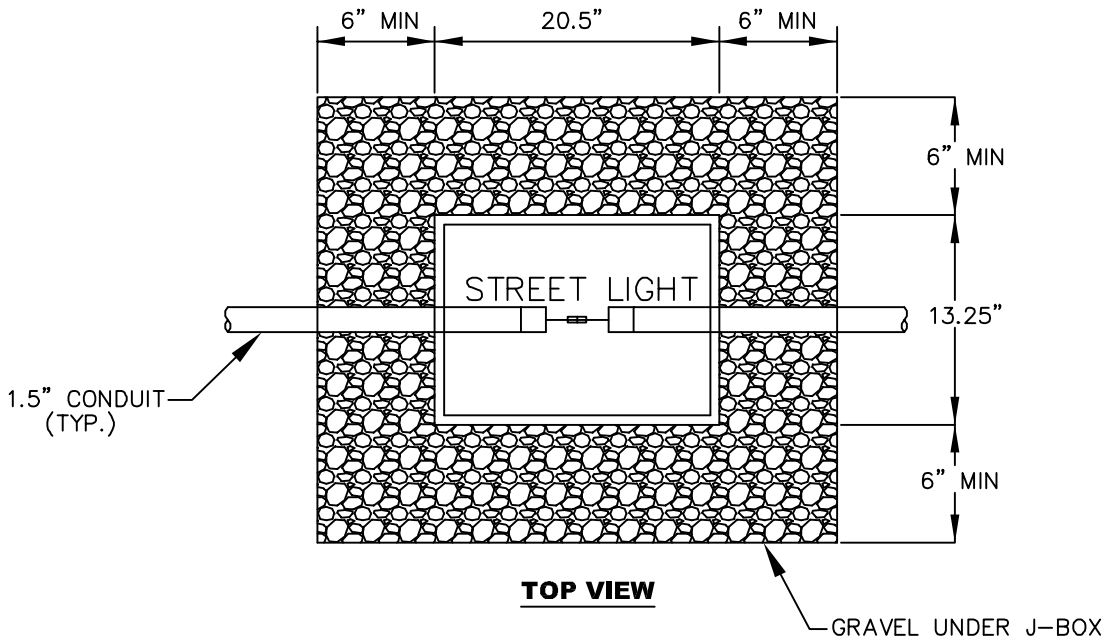

TOP VIEW

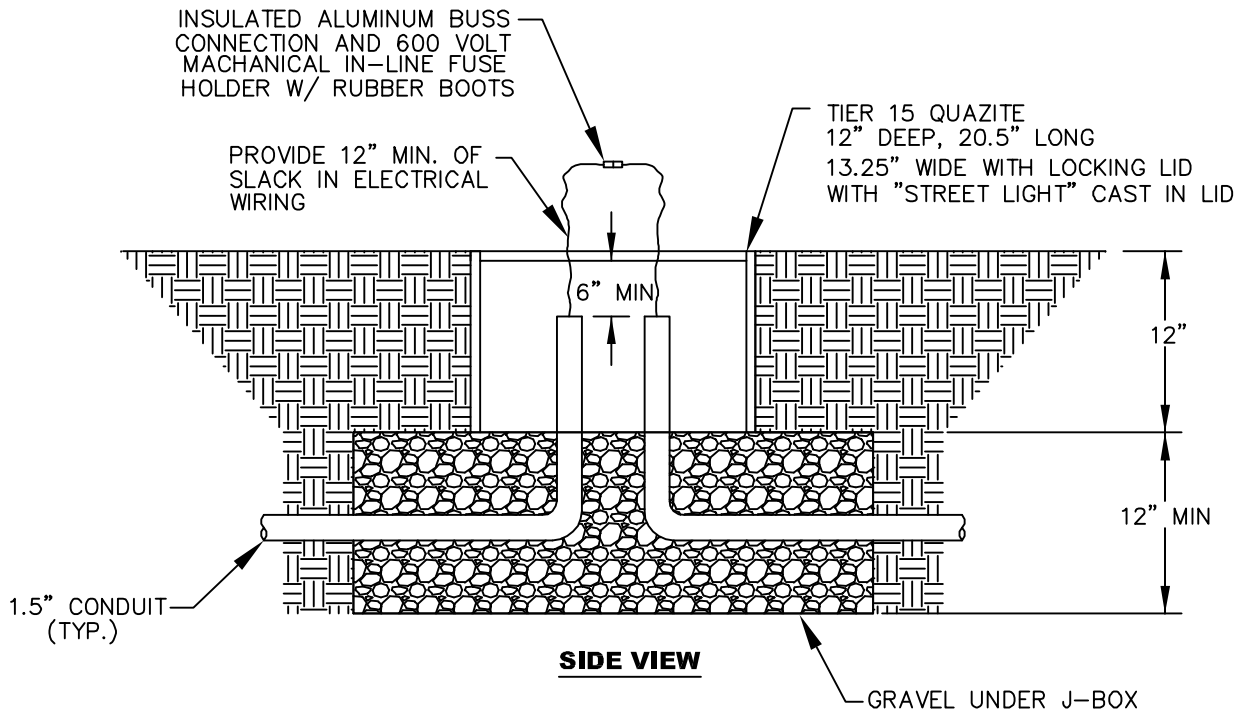

SIDE VIEW

STANDARD STREET LIGHT JUNCTION BOX DETAIL

NO SCALE

NO.	AUTHORIZED BY	REVISIONS	DATE
1	CC	UPDATE	04/2010

Sandy PUBLIC UTILITIES

STANDARD DETAIL

SL-6

STREET LIGHT
JUNCTION BOX DETAIL