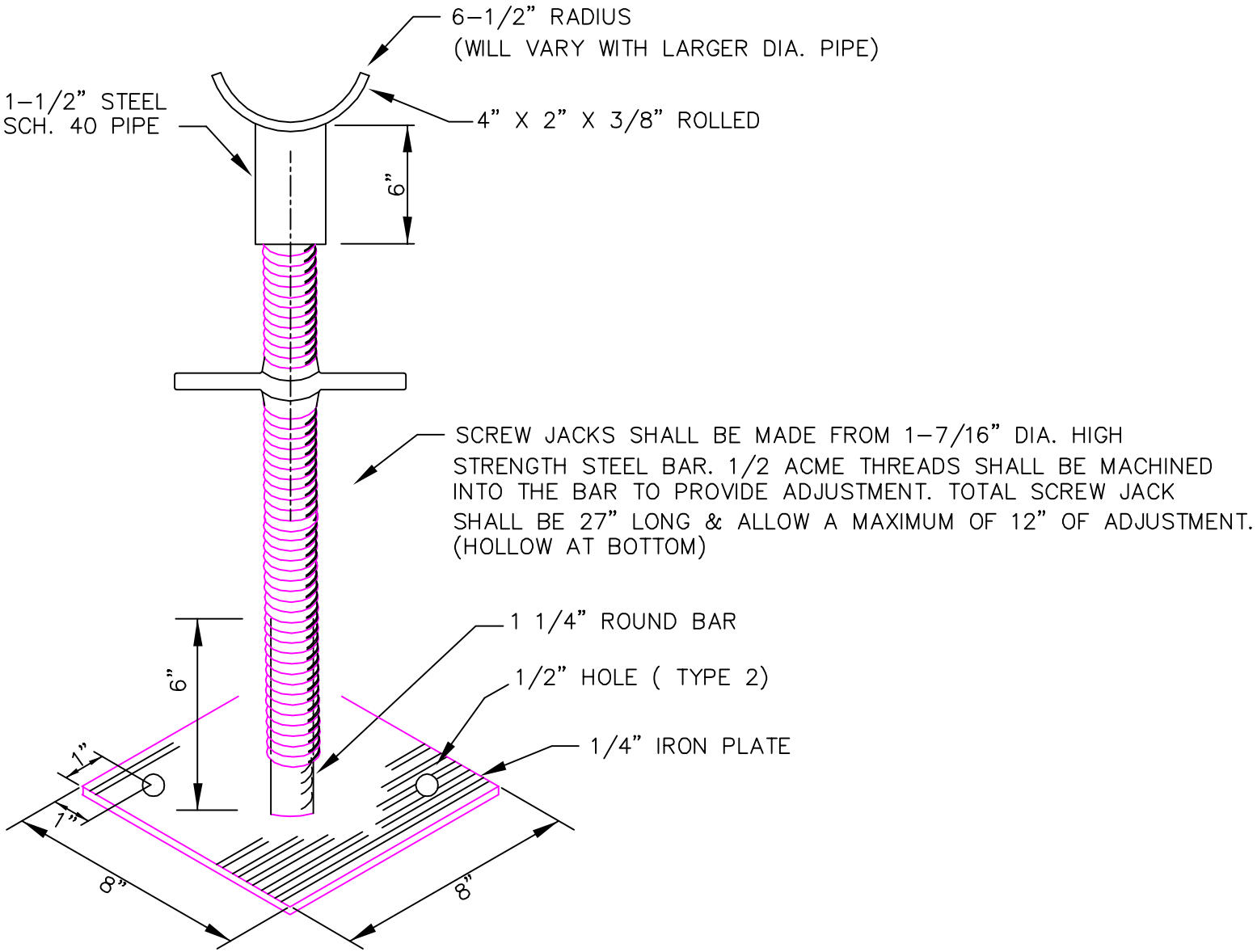

NO.	AUTHORIZED BY	REVISIONS	DATE
1	RSS	UPDATE	12/21/99
2		UPDATE	4/11/03
3	CC	UPDATE	1/2010

Sandy PUBLIC UTILITIES

STANDARD DETAIL

FIGURE_11

JACK STAND PIPE SUPPORT

SCALE: NONE