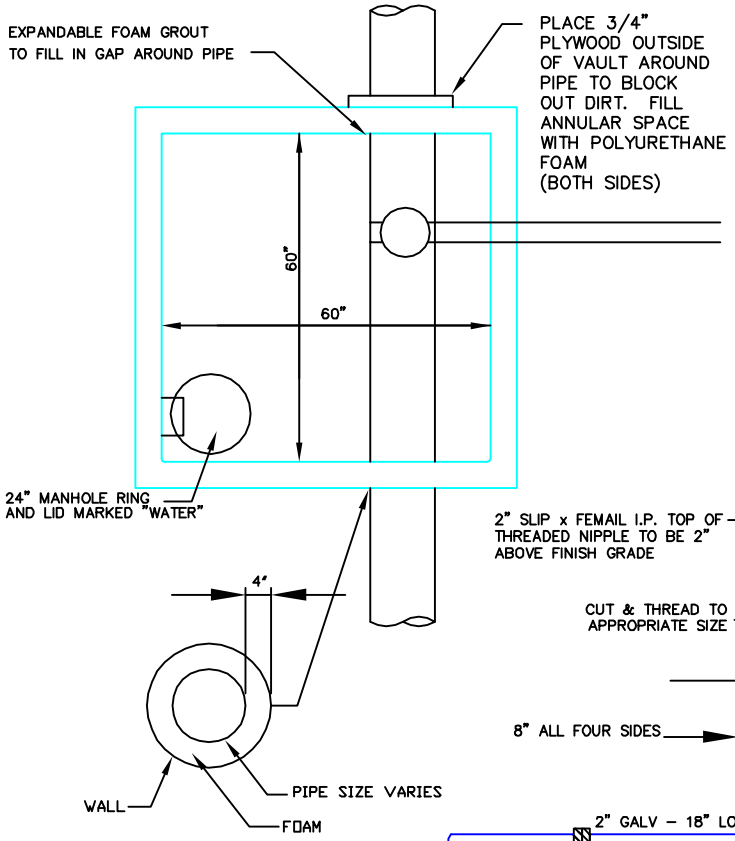

PARTS LIST		
ITEM	QTY	DESCRIPTION
A	1	TS 12" X 6" X 1/4" X 2'-5 3/4"
B	1	TS 12" X 6" X 1/4" X 11 7/8"
C	1	1/4" PL – 6" X 1'-0"
D	2	1/4" PL – 9" X 1'-3"
E	4	3/4" X 4" H.S.A.

NOTES: 1. HOT DIP GALVANIZE AFTER FABERCATION

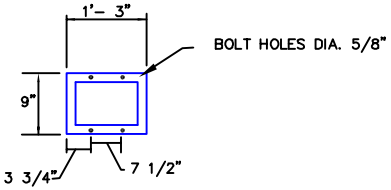

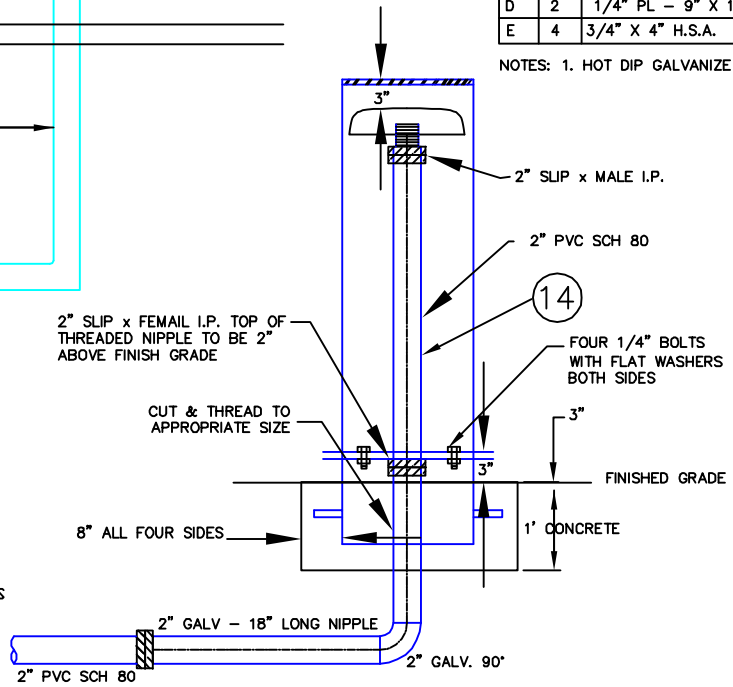

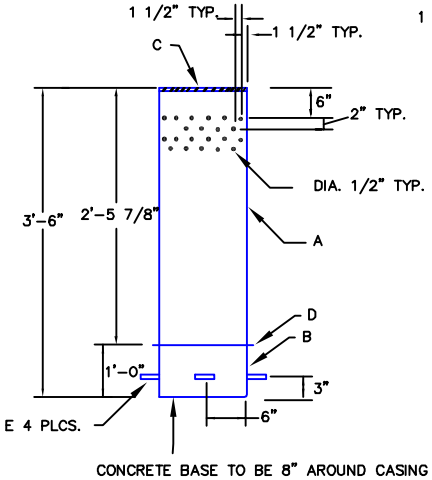

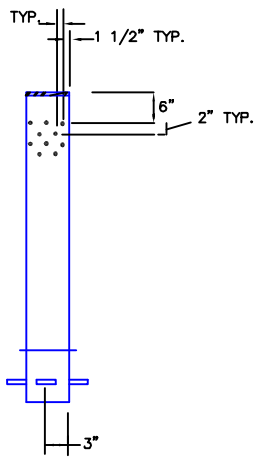

STAND PIPE DETAIL

N.T.S.

1. 2" SADDLE DOUBLE STRAP HEAVY DUTY BRASS
2. 2" X 3" BRASS NIPPLE
3. 2" THREADED BRASS BALL VALVE
4. 2" X 2" BRASS NIPPLE
5. 2" THREADED AIR VAC. RELIEF VALVE APCO MODEL 145 C OR APPROVED EAUAL
6. 2" BRASS STREET 90°
7. 2" PLASTIC UNION
8. CLOSE PLASTIC NIPPLE
9. 2" X 3/4" PLASTIC TEE 2" THREAD x 3/4" THREAD
10. 3/4" PLASTIC OR BRASS CLOSED NIPPLE
11. 3/4" THREADED BRASS BALL VALVE
12. 3/4" BRASS PLUG
13. 2" PLASTIC I.P. THREAD X SLIP
14. 2" PVC SCH. 80
15. 2" GAL 90 SCH. 80
16. 2" PLASTIC GLUE / MALE I.P. THREAD
17. MOLE VENT ALUMNI BODY / STAINLESS SCREEN #14 MESH A-1 MCDONALD #M6F OR EQUAL
18. STEPS (6 @ 12") M.A. INDUSTRIES, INC. PSI-PF OR EQUAL

NO.	AUTHORIZED BY	REVISIONS	DATE
1	RSS	UPDATE	12/21/99
2	RSS	REVIEWED	2004
3	RSS	UPDATE	4/24/08
4	CC	UPDATE	1/2010

Sandy PUBLIC UTILITIES

STANDARD DETAIL

FIGURE_04B

AIR & VACUUM RELIEF VALVE

SCALE: NONE