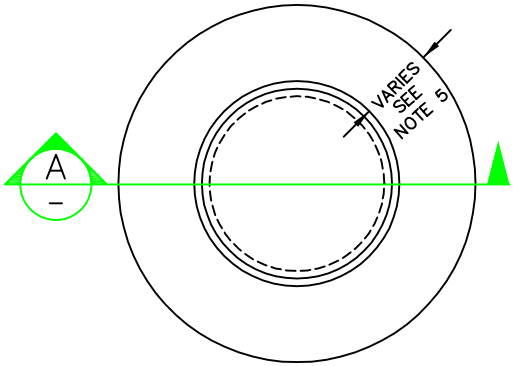

SANITARY SEWER MANHOLES
SURVEY MONUMENT BOXES
WATER VALVE BOXES
PRESSURE REDUCE VALVE BOXES
AIR VAC BOXES
WASHOUT BOXES

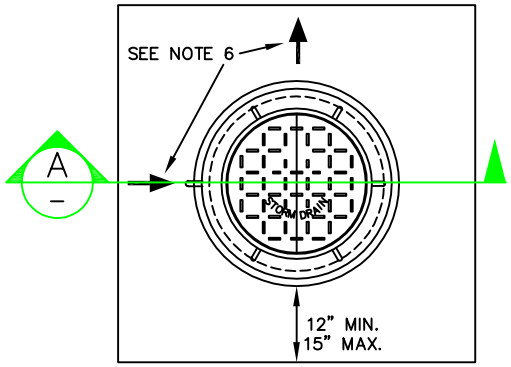

STORM DRAIN MANHOLES
OIL/WATER SEPARATOR MANHOLES
WATER METER VAULT

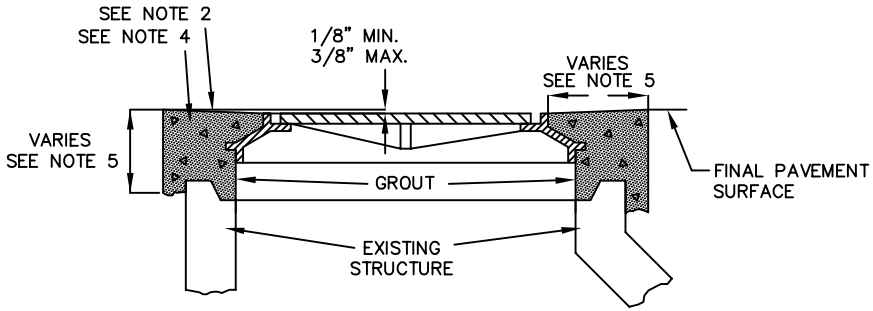

FRAME AND COLLAR SECTION A

NOT TO SCALE

GENERAL NOTES

1. ALL MATERIALS REFER TO SANDY CITY SPECIFICATIONS SECTION 02438 – STRUCTURES TO FINISH GRADE.
2. FINISH GRADE OF FRAME AND LID TO BE A MINIMUM OF 1/8" AND MAXIMUM OF 3/8" BELOW NEW STREET PAVING SURFACE AND SHALL MATCH THE NEW TRANSVERSE SLOPE. THE ELEVATION DIFFERENCE SHALL BE DISTRIBUTED GRADUALLY WITHIN THE WIDTH OF THE CONCRETE COLLAR. IF MANHOLES AND VALVE BOXES ARE IN LANDSCAPE AREA, ADJUST THEM TO GRADE.
3. ANY PART OF THE COLLAR OR LID HIGHER THAN THE SURROUNDING SURFACE AS MEASURED WITH A STRAIGHT EDGE SPANNING FROM OUTSIDE EDGE OF COLLAR TO OUTSIDE EDGE OF COLLAR SHALL BE REJECTED AND SHALL BE REMOVED AND REPLACED.
4. ALL CONCRETE SHALL MEET THE REQUIREMENTS SPECIFIED IN SECTIONS 03000 AND 03300. NO BAG MIX. BATCH PLANT ONLY.
5. CONSTRUCT CONCRETE COLLARS AS FOLLOWS:

STRUCTURE TYPE	SHAPE	WIDTH	THICK*	INSCRIPTION ON LID
STORM DRAIN MANHOLE	SQUARE	12"	8"	STORM DRAIN
OIL/WATER SEPARATOR MANHOLE	SQUARE	12"	8"	OIL/WATER SEPARATOR
WATER METER VAULT	SQUARE	12"	6"	WATER METER
PRV & AIR VAC BOXES	ROUND	12"	8"	WATER
WATER VALVE BOXES	ROUND	12"	12"	WATER
SANITARY SEWER MANHOLES	ROUND	12"	8"	**
SURVEY MONUMENT BOXES	ROUND	8"	8"	NA
OTHER UTILITY MANHOLES OR VAULTS	CONTACT CITY ENGINEER			

* OR AS APPROVED BY SANDY CITY INSPECTOR
** PER SEWER DISTRICT REQUIREMENTS

6. FOR ALL STORM DRAIN PIPES, ETCH OR SCORE AN ARROW IN THE SURFACE OF THE CONCRETE COLLAR INDICATING THE DIRECTION OF FLOW.
7. UPON WRITTEN AUTHORIZATION FROM THE CITY ENGINEER, ASPHALTIC CONCRETE MAY BE SUBSTITUTED FOR CONCRETE COMPLYING WITH CITY SPECIFICATIONS ON STREETS WITH A RIGHT OF WAY WIDTH OF 64' OR LESS (MINOR COLLECTOR).

ASPHALT COLLAR (IF APPROVED)

1. ASPHALT COLLAR SHALL BE RECYCLED ASPHALT MIX PREPARED ON SITE IN PORTABLE ASPHALT BATCH PLANT.
2. RECYCLED ASPHALT MIX SHALL BE APPLIED AT A TEMPERATURE NOT LESS THAN 200° F. AND COMPACTED TO 98% OF MAXIMUM DENSITY (AT AIR TEMPS 50° F AND RAISING).
3. TACK COAT SHALL BE APPLIED TO ALL SURFACES PRIOR TO PLACING ASPHALT.

NO.	AUTHORIZED BY	REVISIONS	DATE
1	TS	CREATED	6/2017

Sandy
HEART OF THE WASATCH

STANDARD DETAIL
PUBLIC UTILITIES

FG–01

STRUCTURES TO FINISH GRADE