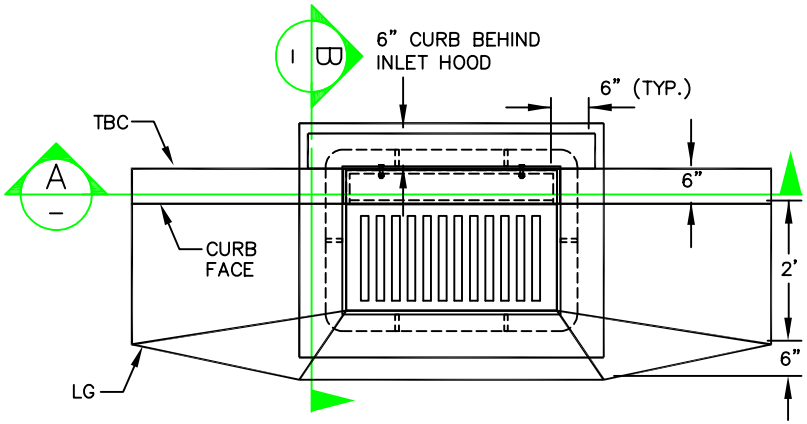

SINGLE CURB INLET BOX

* SEE SHEET SD-01 FOR SPECIFICATIONS AND ADDITIONAL NOTES/DETAILS INCLUDING WALL REINFORCEMENT.

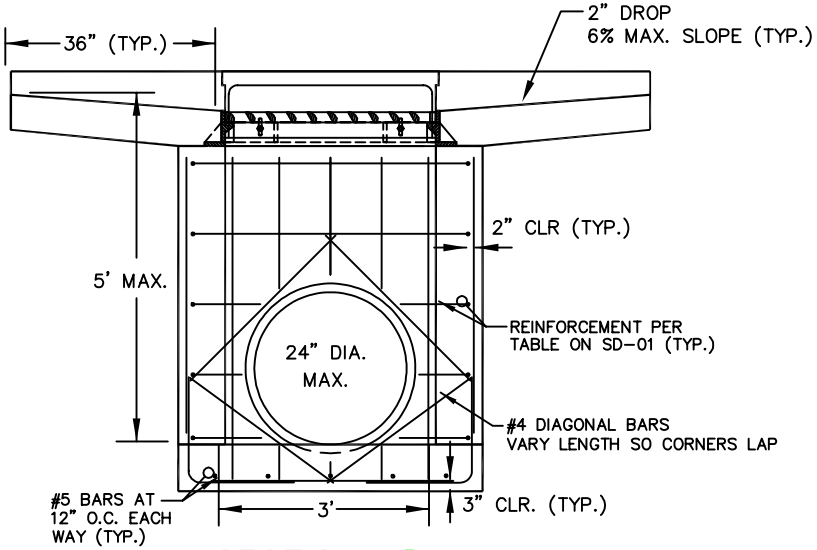

SECTION A

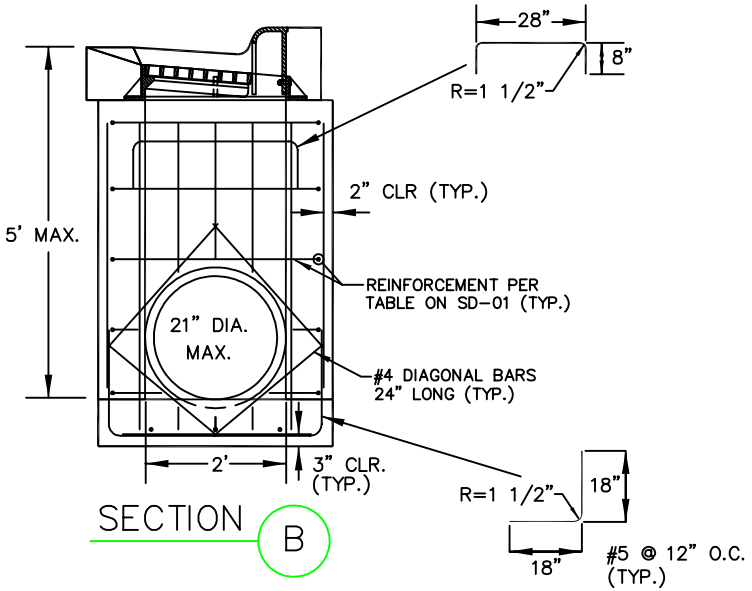

SECTION B

NOT TO SCALE

NO.	AUTHORIZED BY	REVISIONS	DATE
1	TS	CREATED	6/2017

Sandy
HEART OF THE WASATCH

STANDARD DETAIL
PUBLIC UTILITIES

SD-02

SINGLE CURB INLET BOX