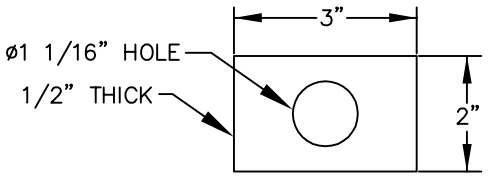

PLATE WASHER DETAIL

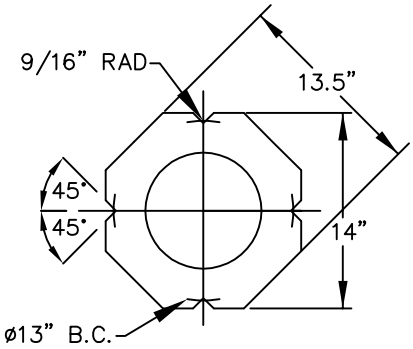

POLE BASE PLATE DETAILS
(1" THICK)

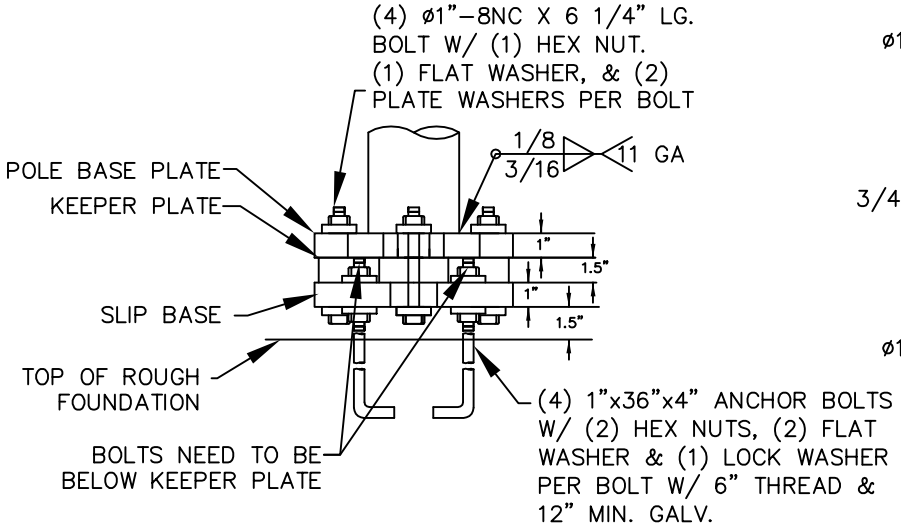

SLIP BASE CONNECTION DETAIL

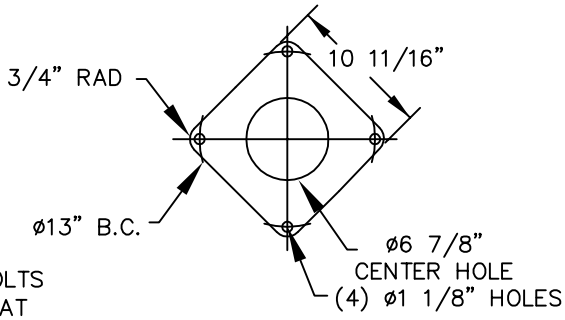

28 GA (0.015") KEEPER PLATE DETAIL

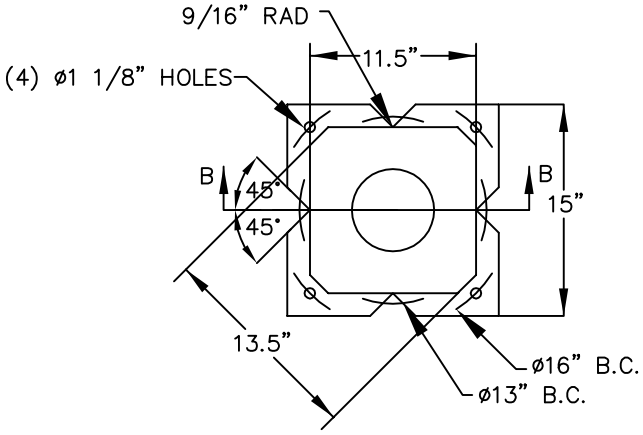

SLIP BASE DETAIL

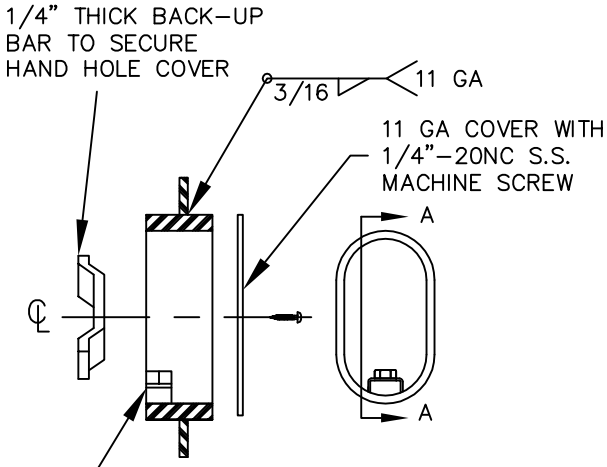

SECTION A-A **FRONT VIEW**

4" x 6 1/2" HAND HOLE FRAME DETAIL

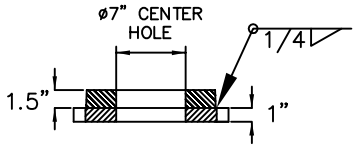

SECTION B-B

GROUND LUG PROVISION
INSIDE HAND HOLE

NOTE: SLIP BASE SHALL
BE COATED BLACK.

NOT TO SCALE

NO.	AUTHORIZED BY	REVISIONS	DATE
1	CC	CREATED	6/2017

Sandy
HEART OF THE WASATCH

STANDARD DETAIL
PUBLIC UTILITIES

SL–07

ARTERIAL STREET LIGHT
BASE CONNECTION DETAIL